Cambridge International AS & A Level

Cambridge International Examinations
Cambridge International Advanced Subsidiary and Advanced Level

CANDIDATE NAME	
CENTRE NUMBER	CANDIDATE NUMBER

5917905208

PHYSICS **9702/51**

Paper 5 Planning, Analysis and Evaluation **October/November 2016**

1 hour 15 minutes

Candidates answer on the Question Paper.

No Additional Materials are required.

READ THESE INSTRUCTIONS FIRST

Write your Centre number, candidate number and name on all the work you hand in.
Write in dark blue or black pen.
You may use an HB pencil for any diagrams or graphs.
Do not use staples, paper clips, glue or correction fluid.
DO **NOT** WRITE IN ANY BARCODES.

Answer **all** questions.

Electronic calculators may be used.
You may lose marks if you do not show your working or if you do not use appropriate units.

At the end of the examination, fasten all your work securely together.
The number of marks is given in brackets [ ] at the end of each question or part question.

This document consists of **8** printed pages.

© UCLES 2016

CAMBRIDGE International Examinations

1 A student is investigating the motion of magnets falling through a vertical copper pipe as shown in Fig. 1.1.

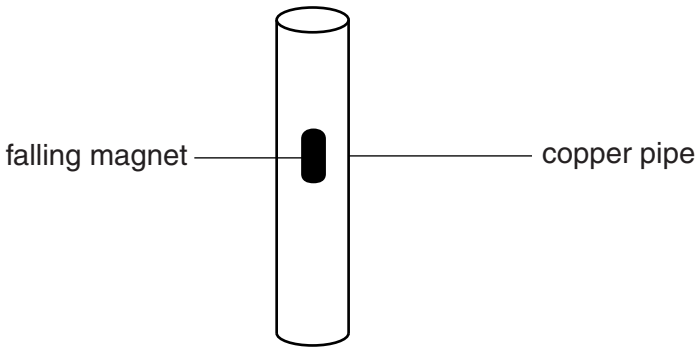

Fig. 1.1

The student releases a magnet above the copper pipe. The magnet has speed v as it leaves the pipe.

It is suggested that the relationship between v and B is

$$v = v_0 e^{-\lambda B}$$

where B is the magnetic flux density at the poles of the magnet and v_0 and λ are constants.

Design a laboratory experiment to test the relationship between v and B. Explain how your results could be used to determine values of v_0 and λ. You should draw a diagram, on page 3, showing the arrangement of your equipment. In your account you should pay particular attention to

- the procedure to be followed,
- the measurements to be taken,
- the control of variables,
- the analysis of the data,
- any safety precautions to be taken.

[15]

© UCLES 2016

Diagram

.....

.....

.....

.....

.....

.....

.....

.....

.....

.....

.....

.....

.....

.....

[Total: 15]

© UCLES 2016

2 A student is investigating a circuit containing capacitors.

The capacitors are initially uncharged. A capacitor of capacitance Y is charged by connecting it to a power supply. The charge is then shared with another capacitor of capacitance C connected between the terminals P and Q, as shown in Fig. 2.1.

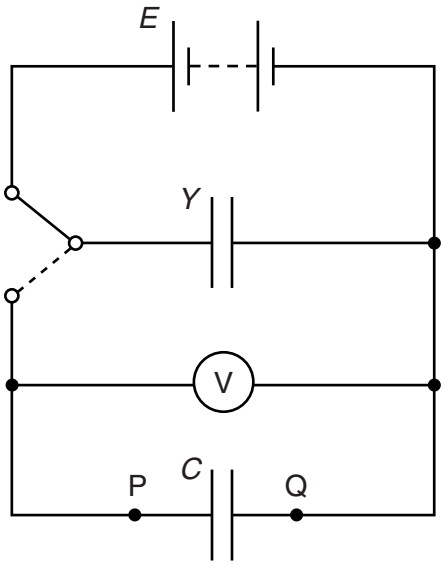

Fig. 2.1

A voltmeter is used to measure the maximum potential difference V between P and Q.

The experiment is repeated by adding additional capacitors, each of capacitance C, in series between P and Q.

The total capacitance X between P and Q may be determined by the equation

$$X = \frac{C}{n}$$

where n is the number of capacitors in series.

It is suggested that V and X are related by the equation

$$YE = (X + Y)V$$

where E is the e.m.f. of the power supply.

(a) A graph is plotted of $\frac{1}{V}$ on the y-axis against X on the x-axis.

Determine expressions for the gradient and y-intercept.

gradient = ...

y-intercept = ...

[1]

(b) Values of n and V are given in Fig. 2.2.

Data: $C = (2.7 \pm 0.4) \times 10^{-3}\,\text{F}$

n	V/V	$X/10^{-3}\,\text{F}$	$\frac{1}{V}/\,\text{V}^{-1}$
1	1.20		
2	1.95		
3	2.35		
4	2.75		
5	2.90		
6	3.05		

Fig. 2.2

Calculate and record values of $X/10^{-3}\,\text{F}$ and $\frac{1}{V}/\,\text{V}^{-1}$ in Fig. 2.2.

Include the absolute uncertainties in X. [3]

(c) (i) Plot a graph of $\frac{1}{V}/\,\text{V}^{-1}$ against $X/10^{-3}\,\text{F}$.

Include error bars for X. [2]

(ii) Draw the straight line of best fit and a worst acceptable straight line on your graph. Both lines should be clearly labelled. [2]

(iii) Determine the gradient of the line of best fit. Include the absolute uncertainty in your answer.

gradient = ... [2]

© UCLES 2016

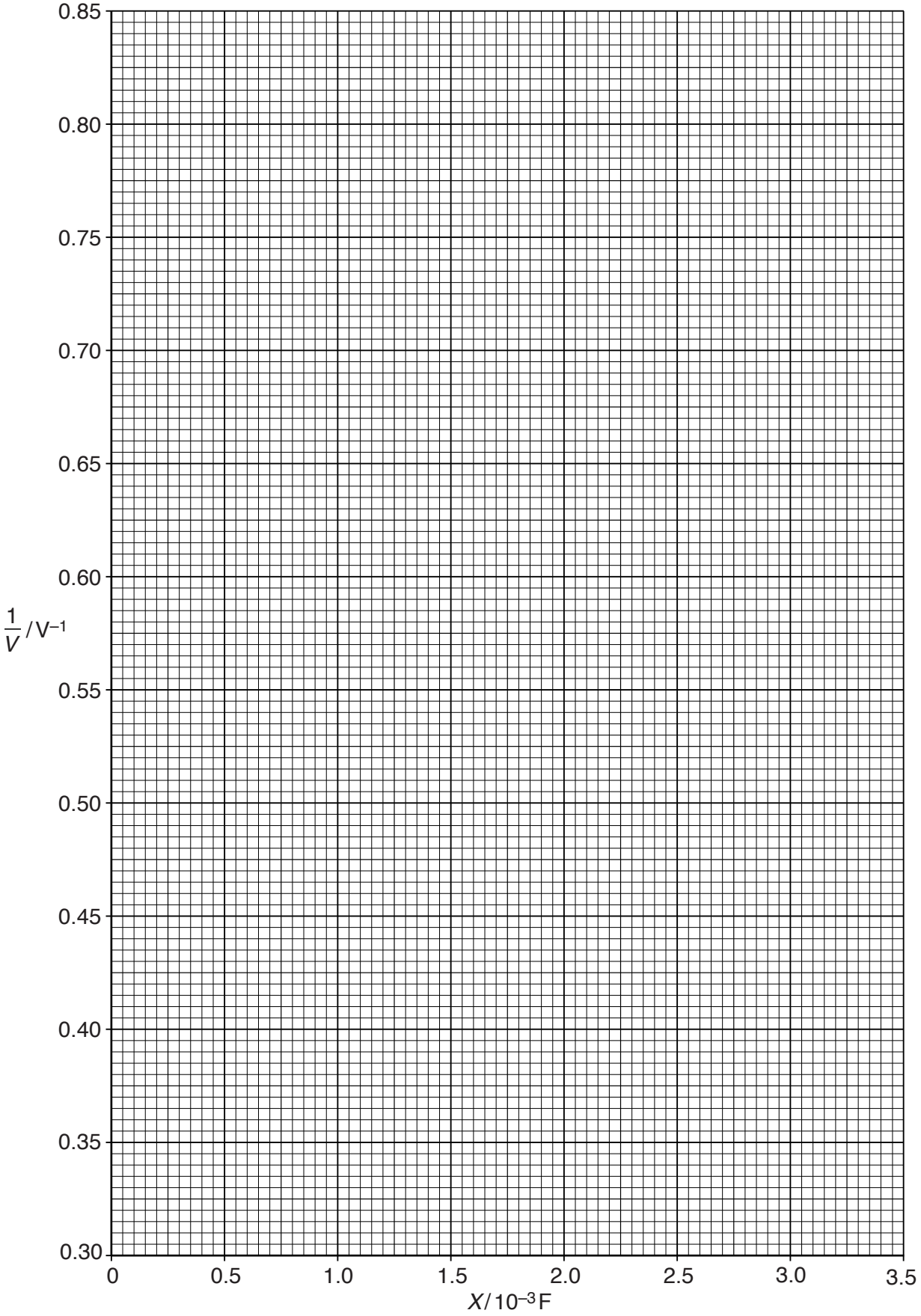
0.85
0.80
0.75
0.70
0.65
0.60
0.55
0.50
0.45
0.40
0.35
0.30
1/V / V⁻¹
0
0.5
1.0
1.5
2.0
2.5
3.0
3.5
X / 10⁻³ F

(iv) Determine the *y*-intercept of the line of best fit. Include the absolute uncertainty in your answer.

y-intercept = ...[2]

(d) (i) Using your answers to **(a)**, **(c)(iii)** and **(c)(iv)**, determine the values of *E* and *Y*. Include an appropriate unit for *Y*.

E = ... V

Y = ...
[2]

(ii) Determine the percentage uncertainty in *Y*.

percentage uncertainty in *Y* = ... % [1]

[Total: 15]

To avoid the issue of disclosure of answer-related information to candidates, all copyright acknowledgements are reproduced online in the Cambridge International Examinations Copyright Acknowledgements Booklet. This is produced for each series of examinations and is freely available to download at www.cie.org.uk after the live examination series.

© UCLES 2016